University of California, Berkeley
Physics 110A Fall 2001 Section 1 (*Strovink*)

Solution Set 5 (compiled by Daniel Larson)

1. **Griffiths 5.1** Since the field is pointing into the page, a positive charge would feel a force in the direction $\mathbf{v} \times \mathbf{B}$, which is up. So the charge is **positive**. From example 5.1 we know that momentum is $p = QBR$ where R is the radius of the circle traced out by the charge. Using the pythagorean theorem, and in the figure below, we find $(R-d)^2 + a^2 = R^2 \;\Rightarrow\; R^2 - 2Rd + d^2 + a^2 = R^2 \;\Rightarrow\; R = (a^2+d^2)/2d$. Thus $p = QB\frac{a^2+d^2}{2d}$.

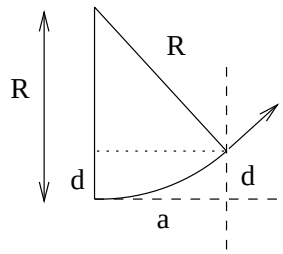

Problem 1. Griffiths 5.1

2. **Griffiths 5.7** First lets calculate the time derivative of the total dipole moment. Recall the definition of $\mathbf{p} = \int_{\mathcal{V}} \rho \mathbf{r}\, d\tau$.

$$\frac{d\mathbf{p}}{dt} = \frac{d}{dt}\int_{\mathcal{V}} \rho\mathbf{r}\, d\tau = \int_{\mathcal{V}} \left(\frac{\partial \rho}{\partial t}\right)\mathbf{r}\, d\tau = -\int_{\mathcal{V}} (\boldsymbol{\nabla}\cdot\mathbf{J})\mathbf{r}\, d\tau,$$

where in the last equality we've used the continuity equation. Now we need to use the hint, so calculate $\boldsymbol{\nabla}\cdot(x\mathbf{J}) = x(\boldsymbol{\nabla}\cdot\mathbf{J}) + \mathbf{J}\cdot(\boldsymbol{\nabla}x) = x(\boldsymbol{\nabla}\cdot\mathbf{J}) + J_x$ because $\boldsymbol{\nabla}x = \hat{\mathbf{x}}$. We are assuming that the current is completely within the volume $\mathcal{V}$, so that means there can be no current leaving through the surface S. But that is true only if $\mathbf{J}\cdot d\mathbf{a} = 0$ on S.

$$\int_{\mathcal{V}} x(\boldsymbol{\nabla}\cdot\mathbf{J})\, d\tau + \int_{\mathcal{V}} J_x\, d\tau = \int_{\mathcal{V}} \boldsymbol{\nabla}\cdot(x\mathbf{J})\, d\tau = \int_S x\mathbf{J}\cdot d\mathbf{a} = 0 \quad\Rightarrow\quad \int_{\mathcal{V}} J_x\, d\tau = -\int_{\mathcal{V}} (\boldsymbol{\nabla}\cdot\mathbf{J})x\, d\tau.$$

We can make the same argument with x replaced by y or z. Putting the three results together gives the vector equation $-\int_{\mathcal{V}}(\boldsymbol{\nabla}\cdot\mathbf{J})\mathbf{r}\, d\tau = \int_{\mathcal{V}} \mathbf{J}\, d\tau$. Combining this with the previous computation, we find $\frac{d\mathbf{p}}{dt} = \int_{\mathcal{V}} \mathbf{J}\, d\tau$.

3. **Griffiths 5.8**

   (a) We can use the intermediate result from example 5.5, namely equation (5.35). In this case we have $s = R$ and $-\theta_1 = \theta_2 = 45°$. We also have four such contributions, one from each side of the square. So $B = 4\frac{\mu_0 I}{4\pi R}\left(\frac{\sqrt{2}}{2} - \frac{-\sqrt{2}}{2}\right) = \mu_0 I\sqrt{2}/\pi R$.

   (b) Generalizing the previous result, $s = R$, $-\theta_1 = \theta_2 = \pi/n$, so $B = n\frac{\mu_0 I}{4\pi R}[\sin(\pi/n) - \sin(-\pi/n)] = \frac{n\mu_0 I}{2\pi R}\sin(\pi/n)$.

   (c) Now taking $n \to \infty$, for small x, $\sin x \approx x$, so for large n we have $\frac{\sin(\pi/n)}{1/n} \approx \frac{\pi/n}{1/n} = \pi$. Thus $B = \mu_0 I/4R$, which is the result in equation (5.38) with $z = 0$.

4. **Griffiths 5.11** We imagine the solenoid to be a series of n circular coils per unit length, each contributing a field $B = \frac{\mu_0 I}{2}\frac{a^2}{(a^2+z^2)^{3/2}}$ to to point at P, where z is the disance along the solenoid's axis between P and the center of the coil (Equation 5.38). To add up the contributions from all the rings, we note that the amount of current flowing in a section of width dz is $nIdz$, so we need to integrate over $z = a\cot\theta$ from one end of the solenoid to the other.

$$B = \int \frac{\mu_0 I n a^2\, dz}{2(a^2+z^2)^{3/2}} = \frac{\mu_0 I n}{2}\int_{\theta_1}^{\theta_2} \frac{a^2}{a^3(1+\cot^2\theta)^{3/2}}\left(\frac{-a\, d\theta}{\sin^2\theta}\right) = -\frac{\mu_0 n I}{2}\int_{\theta_1}^{\theta_2} \sin\theta\, d\theta = \frac{\mu_0 n I}{2}(\cos\theta_2 - \cos\theta_1)$$

For an infinite solenoid, $\theta_2 = 0$ and $\theta_1 = \pi$, so $\cos\theta_2 - \cos\theta_1 = 1 - (-1) = 2$. Hence $B = \mu_0 n I$.

5. **Griffiths 5.12** Using equation (5.37), the magnetic force of attraction per unit length between two wires carrying currents I_1 and I_2 is $f_m = \frac{\mu_0}{2\pi}\frac{I_1 I_2}{d}$. Since the current in each wire is $I = \lambda v$, we have $f_m = \frac{\mu_0}{2\pi}\frac{\lambda^2 v^2}{d}$. The electric field of one wire at a distance d is $E = \frac{\lambda}{2\pi\epsilon_0 d}$, so the electric repulsion per unit length is $f_e = \lambda E = \frac{\lambda^2}{2\pi\epsilon_0 d}$. The forces will balance when $f_m = f_e \;\Rightarrow\; \mu_0 v^2 = 1/\epsilon_0 \;\Rightarrow\; v^2 = 1/\epsilon_0\mu_0$. But recall that these fundamental constants are related to the speed of light: $\mu_0\epsilon_0 c^2 = 1$. Thus the forces will balance when $v = c = 3\times 10^8$ m/s. Obviously one could never accelerate any physical wires to the speed of light; thus the electric repulsion always dominates.

6. **Griffiths 5.17** Let's choose coordinates so that the z-axis runs along the axis of the solenoid. We want to find the magnetic field at any arbitrary point. But we can choose coordinates so that this point is on the y-axis: $\mathbf{r} = (0, y, 0)$. Now we want to look at contributions to the magnetic field from small pieces of current loops, one above and one below $\mathbf{r}$, as shown in the figure. First consider the contribution from a section on loop 1 at position (x', y', z'), located above $\mathbf{r}$. $d\mathbf{l}' = dx'\,\hat{\mathbf{x}} + dy'\,\hat{\mathbf{y}}$. Also, the vector pointing from (x', y', z') to $\mathbf{r} = (0, y, 0)$ is: $\tilde{\mathbf{r}} = -x'\,\hat{\mathbf{x}} + (y - y')\,\hat{\mathbf{y}} - z'\,\hat{\mathbf{z}}$. Thus $d\mathbf{l}' \times \tilde{\mathbf{r}} = (-z'\,dy')\,\hat{\mathbf{x}} + (z'\,dx')\,\hat{\mathbf{y}} + [(y - y')\,dx' + x'\,dy']\,\hat{\mathbf{z}}$. So the contribution to the magnetic field from this piece of loop 1 is:

$$d\mathbf{B}_1 = \frac{\mu_0 I}{4\pi}\frac{d\mathbf{l}' \times \tilde{\mathbf{r}}}{\tilde{r}^3} = \frac{\mu_0 I}{4\pi}\frac{(-z'\,dy')\,\hat{\mathbf{x}} + (z'\,dx')\,\hat{\mathbf{y}} + [(y - y')\,dx' + x'\,dy']\,\hat{\mathbf{z}}}{[(x')^2 + (y - y')^2 + (z')^2]^{3/2}}$$

Now we want to consider the contribution from a section of a coil that is at the same position but below $\mathbf{r}$, i.e. at $(x', y', -z')$. The only difference is that z' changes sign, so the contribution to the magnetic field will be

$$d\mathbf{B}_2 = \frac{\mu_0 I}{4\pi}\frac{d\mathbf{l}' \times \tilde{\mathbf{r}}_2}{\tilde{r}_2^3} = \frac{\mu_0 I}{4\pi}\frac{(z'\,dy')\,\hat{\mathbf{x}} + (-z'\,dx')\,\hat{\mathbf{y}} + [(y - y')\,dx' + x'\,dy']\,\hat{\mathbf{z}}}{[(x')^2 + (y - y')^2 + (-z')^2]^{3/2}}$$

When these two contributions are added, the $\hat{\mathbf{x}}$ and $\hat{\mathbf{y}}$ components exactly cancel, leaving only a z-component. Because we have an infinite solenoid, every piece of current above $\mathbf{r}$ has a corresponding piece below, so all x and y components will cancel, and the total magnetic field will point in the z direction. Since we never assumed that $\mathbf{r}$ was either inside or outside the solenoid, this result holds in both cases. Finally, we can use Ampere's law just like in example 5.9 to conclude $\mathbf{B} = 0$ outside the solenoid and $\mathbf{B} = \mu_0 n I\,\hat{\mathbf{z}}$ inside.

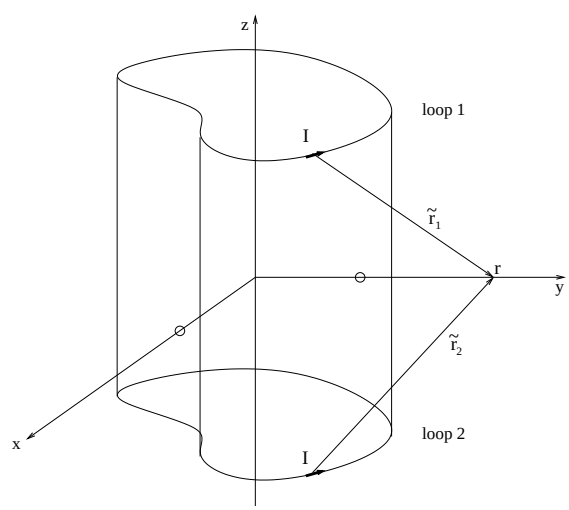

Problem 6. Griffiths 5.17

For the toroid, $N/2\pi s \approx n$ as long as the radius of the whole toroid is very large compared to the "radius" of the cross-sectional area. This means that s is about the same at the inner and outer edges of the toroid; in other words, that the coils are not much closer to each other on the inside edge than on the outer edge. If this is the case, then equation (5.58) gives $B = \mu_0 n I$ just like for a straight solenoid.

7. **Griffiths 5.20** Ampere's law says $\boldsymbol{\nabla} \times \mathbf{B} = \mu_0 \mathbf{J}$. Taking the divergence of both sides we get $\boldsymbol{\nabla} \cdot (\boldsymbol{\nabla} \times \mathbf{B}) = \mu_0 \boldsymbol{\nabla} \cdot \mathbf{J} = -\mu_0 \frac{\partial \rho}{\partial t}$, after using the continuity equation. This is inconsistent with the fact that the divergence of a curl is *always* zero, *unless* we have $\frac{\partial \rho}{\partial t} = 0$, which means we are in the magnetostatic regime. Thus outside of magnetostatics we need to have something else on the right hand side for Ampere's law to be valid; later we'll find out we have to add $\mu_0 \epsilon_0 \frac{\partial \mathbf{E}}{\partial t}$. The other Maxwell equations are fine: $\boldsymbol{\nabla} \times \mathbf{E} = 0 \Rightarrow \boldsymbol{\nabla} \cdot (\boldsymbol{\nabla} \times \mathbf{E}) = 0$ is consistent, and there aren't any vanishing second derivatives we can make acting on a divergence.

8. **Griffiths 5.21** At this stage we've just learned about electro- and magnetostatics, so we can consider Maxwell's equations without the time derivatives. Gauss's Law and Ampere's Law would probably stay the same. In analogy with Gauss's law, the divergence of $\mathbf{B}$ would be given by magnetic charges, ρ_m. Let the constant be α_0. Then $\boldsymbol{\nabla} \cdot \mathbf{B} = \alpha_0 \rho_m$. This leads to an analog of Coulomb's law, $\mathbf{F} = \frac{\alpha_0}{4\pi} \frac{q_{m_1} q_{m_2}}{r^2} \hat{\mathbf{r}}$. So by defining a unit of magnetic charge we could measure the force between unit charges at a given distance in order to determine α_0. The moving magnetic charges would presumably create electric fields, in analogy with Ampere's law, so $\boldsymbol{\nabla} \times \mathbf{E} = \beta_0 \mathbf{J}_m$, where β_0 is the constant we would have to measure and $\mathbf{J}_m$ is the magnetic current density. We could determine β_0 by measuring the force between two wires carrying a specified amount of magnetic current. If magnetic charge is conserved, the there should be a corresponding continuity equation: $\boldsymbol{\nabla} \cdot \mathbf{J}_m = -\frac{\partial \rho_m}{\partial t}$.

   To get the force law, the first guess for the force on a magnetic charge q_m could be $q_m[\mathbf{B} + (\mathbf{v} \times \mathbf{E})]$. However, the dimensions are wrong, because E has the same units as vB. So we need to divide the second part, $(\mathbf{v} \times \mathbf{E})$ by something with dimensions of velocity-squared. The obvious choice is the speed of light, especially in light of the relationship $\mu_0 \epsilon_0 c^2 = 1$. So the total force law would be:

$$\mathbf{F} = q_e[\mathbf{E} + (\mathbf{v} \times \mathbf{B})] + q_m \left[\mathbf{B} - \frac{1}{c^2} (\mathbf{v} \times \mathbf{E}) \right].$$

   (The minus sign is to keep consistent with special relativity. For more discussion of magnetic charge in terms of the full Maxwell equations, you could look ahead to Section 7.3.4 in the text.)